Installation Instructions

Model Number 1012-00

Assembly Components:
- *Locking Right angle wall mount – 1 each*
- *Cover – 1 each*
- *Access Point Receiving Plate – 1 each*
- *Tether Wrap– 1 each*
- *#8 - 32 screw (for locking access point in place) – 1 each*
- *Installation Instructions – 1 each*

If any of these items are missing, contact your Oberon representative.

Step 1 – If applicable, install the conduit clamp(s). Clamps can be installed on either side of the mount or the cover by removing the ½" trade size knockout punch.

Step 2 – Place the mount on the wall where it is to be installed (it is recommended that you mount directly to a stud if possible) and mark the screw locations. Use a minimum of two (2) #10 x 2" or larger screws (not included) to secure the mount in place. However, if there is no stud at the mounting location, it is recommended that you use a minimum of 4 suitable anchors to secure the mount in place (Figure 1). Due to the weight of this unit, plastic expansion wall anchors are not adequate for drywall installations. During installation, Oberon recommends that one of the following be used: 1) threaded drywall anchors; 2) threaded drywall toggles; 3) sleeve type hollow wall anchors (a.k.a. molly bolts); or 4) toggle bolts.

If placing the mount over a telecommunications receptacle, remove the wall plate and then fasten the mount to the wall. Once secured, fasten the wall plate back over the receptacle.

NOTE: If no telecommunications receptacle is available, a surface mount box (or biscuit jack) and equipment cord can be conveniently mounted inside the Model 1012. (Non-plenum rated cables can be used inside a plenum rated enclosure). Use an adhesive backed surface mount box. Consider bend radius of horizontal cable and equipment cord when attaching the surface mount box.

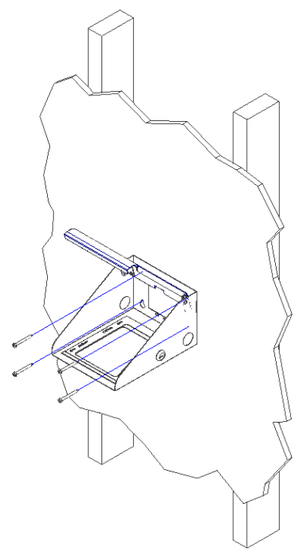

Figure 1 – Use minimum #10 x 2" or larger screws (not included) to fasten right angle mount to wall

⚠**IMPORTANT**** - ***It is important that the mount is securely fastened to the wall to prevent human injury or damage to the access point.***

Step 3 – Run the data and power cable (if required) through the conduit clamp located on either side of the *mount*. The mount has a cutout in it that can accommodate a wall plate for data termination.

Step 4 – Attach the data and power cables to the *access point* prior to securing the *access point* to the mounting bracket. After the *access point* is secured to the mounting bracket, attach antennas to the *access point* if required.

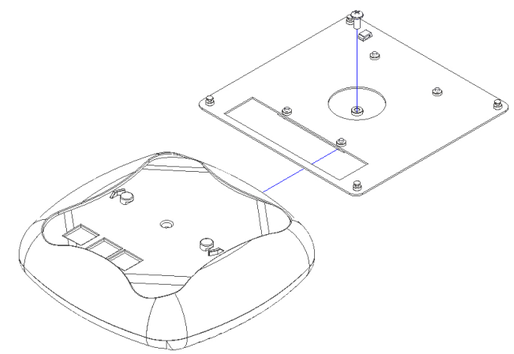

Figure 2 – AP Receiver Plate

Step 5 – Slide the receiver plate onto the AP, then fasten the #8-32 screw to the plate to hold the AP (Figure 2)

Step 6 – Place the AP and plate into the keyholes on the underside of the wall mount (Figure 3). Use the provided tether wrap to prevent the receiver plate from falling when the mount is unlocked. Slip the tether wrap through the slot on the receiver plate and screw it to the cover's hinge. Synch the tether wrap until taut. Close the cover until it snaps shut. Turn the key to lock the cover and AP in place. Installation is now complete.

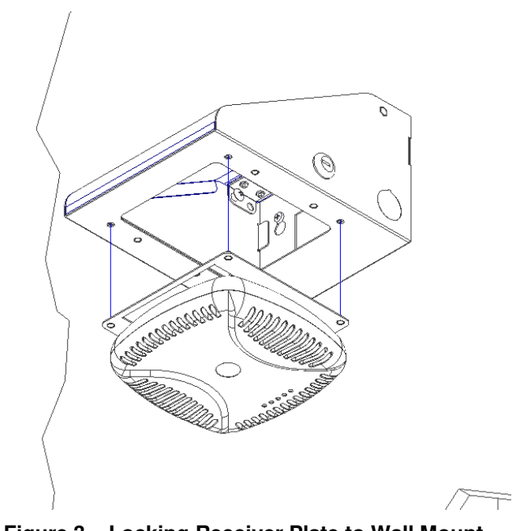

Figure 3 – Locking Receiver Plate to Wall Mount

(877) 867-2312 • www.oberonwireless.com

Oberon, Inc. • 1315 South Allen Street • State College, PA 16801

Copyright 2014

MODEL 1012-00

Installation Instructions

**** WARNING ****

Please thoroughly read the product warning below before installation to provide for a safe work environment.

1. Always consider the hazard to other people:

    a. During installation, use warning signs, etc.
    b. Don’t work with people directly below the work area as equipment could fall and cause an injury

2. Be sure to securely fasten the mount to the wall to prevent the mount from becoming dislodged.